Coolroom Specifications:

Width (mm):	1750
Depth (mm):	1350
Height (mm):	2550

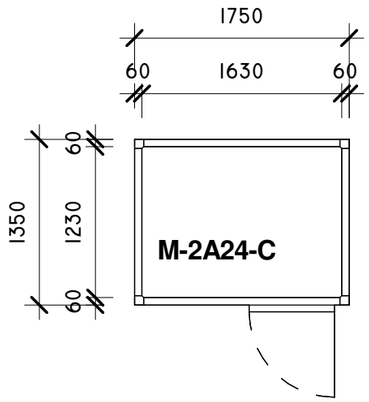

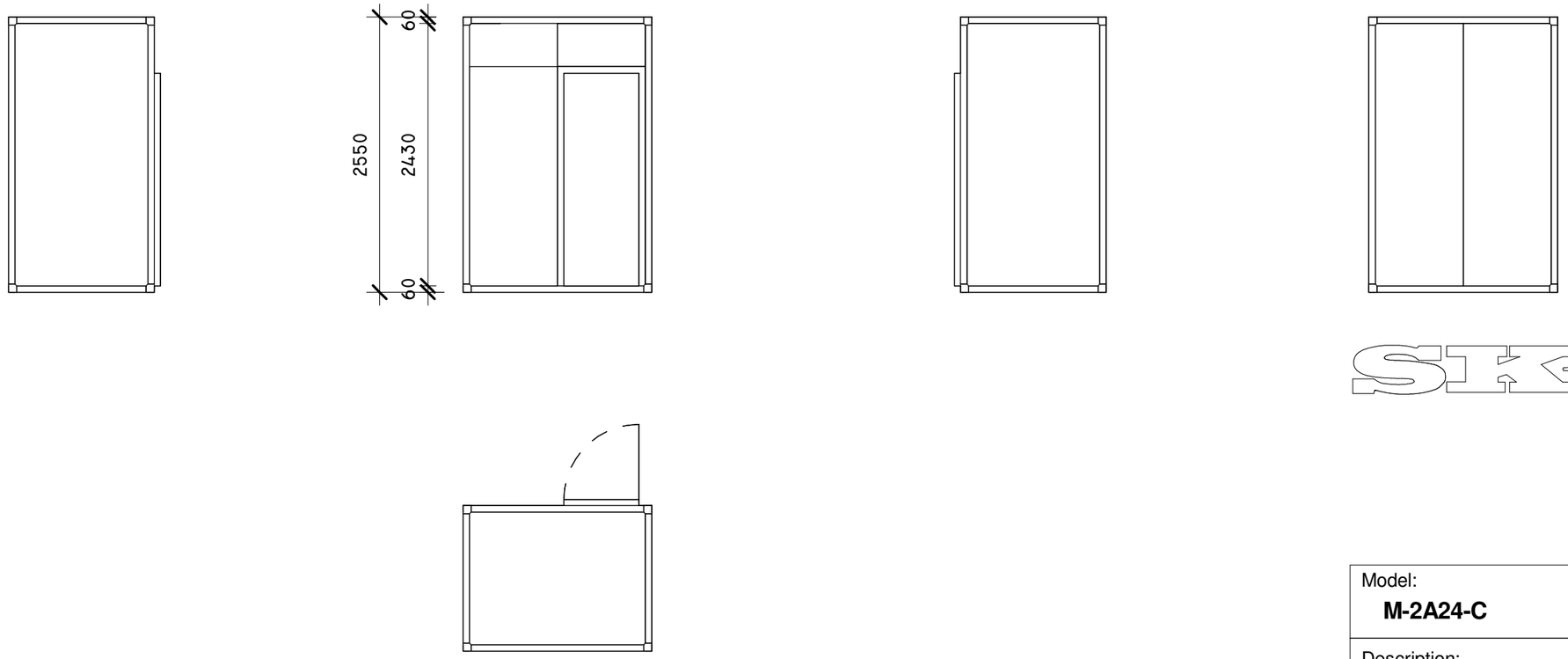

Industries Limited

66 Princess St. PO Box 1091
Christchurch, New Zealand
New Zealand Freephone: 0900 947 5673
Australian Freephone: 1800 121 535
Email: enquiry@skope.co.nz
Website: www.skope.co.nz

Model:

M-2A24-C

Description:

Chiller Room, 4.87m3, S6 panel incl Floor

Unless Otherwise Specified:

Folded Dimensions:	Overall
Linear Tolerances:	+/- 0.5mm
Angular Tolerances:	+/- 0.5mm
Units:	Millimetres

Scale

1:50

Revision

-.-

Copyright © SKOPE Industries Limited